SIGN	DATE	DESCRIPTION	APPROVER
1			

THIS IS CAD DRAWING, DO NOT REVISE MANUALLY!!!

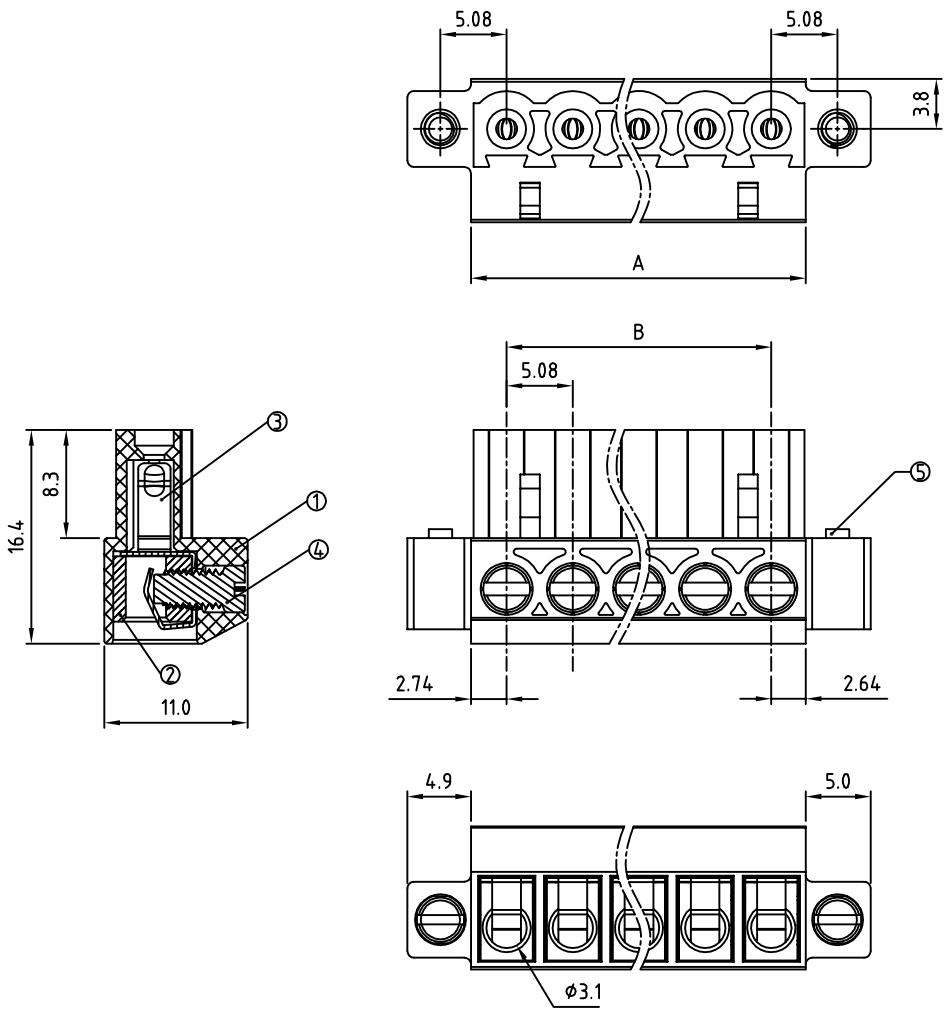

Material:

- Item ① Insulator(housing): Thermoplastic (UL94V-0)
- Item ② Terminal Body: Brass
- Item ③ Wire guard: PhBz
- Item ④ Terminal Screw: Steel zinc plated.
- Item ⑤ With flange screw: M2.5 Steel Zinc plated.

Electrical:	UL
Voltage rating:	300 V
Current rating:	15 A
Wire range:	
Solid wire(AWG):	12-22
Stranded wire(AWG):	12-22
Torque:	4.3 Lbs.-In
Screw:	M3
Wire strip length:	5 mm
Withstanding Voltage:	1.6KV
Operating temperature:	-40°C to +115°C

RoHS Compliant

PART NUMBER:

OSTEZXX5152

No. of Poles
- 02 2 Poles
- 03 3 Poles
- ... ...
- 24 24 Poles

COLOR
- 0: Black
- 5: Green (Standard)
- 6: Blue
- 8: Grey

THESE DRAWINGS AND SPECIFICATIONS ARE THE PROPERTY OF ON-SHORE TECHNOLOGY, INC. AND SHALL NOT BE REPRODUCED, COPIED OR USED IN ANY MANNER WITHOUT THE PRIOR WRITTEN CONSENT OF ON-SHORE TECHNOLOGY, INC.

POLE		2	3	4	5	6	7	8	9	10	11	12
A		10.46	15.54	20.62	25.70	30.78	35.86	40.94	46.02	51.10	56.18	61.26
B		5.08	10.16	15.24	20.32	25.40	30.48	35.56	40.64	45.72	50.80	55.88
Tol.		±0.15					±0.20					
POLE	13	14	15	16	17	18	19	20	21	22	23	24
A	66.34	71.42	76.50	81.58	86.66	91.74	96.82	101.90	106.98	112.06	117.14	122.22
B	60.96	66.04	71.12	76.20	81.28	86.36	91.44	96.52	101.60	106.68	111.76	116.84
Tol.		±0.25					±0.30					

ON-SHORE TECHNOLOGY, INC.

TITLE	OSTEZ-5.08 w/Flange Series				
PART NO.	OSTEZXX5152			DWG NO.	OSTEZXX5152.DWG
APPROVED	CHECKED	DESIGNED	DRAWN	CUST NO.	
		Tony 2007.07.12	Tony 2007.07.12	UNIT: mm	
				SCALE: NONE	
				SHEET: 01/01	REV.: B

Tolerance	
X.	±0.50
X.X	±0.30
X.XX	±0.10
X°	±1°