FILE# APC103

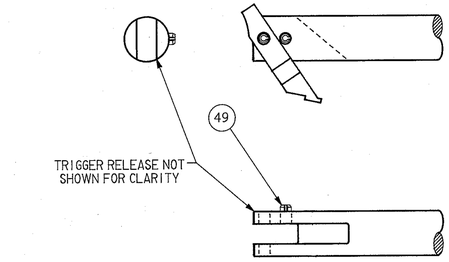

DETAIL B

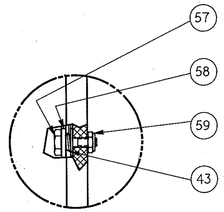

DETAIL A

UNCONTROLLED DOCUMENT
WILL NOT BE UPDATED

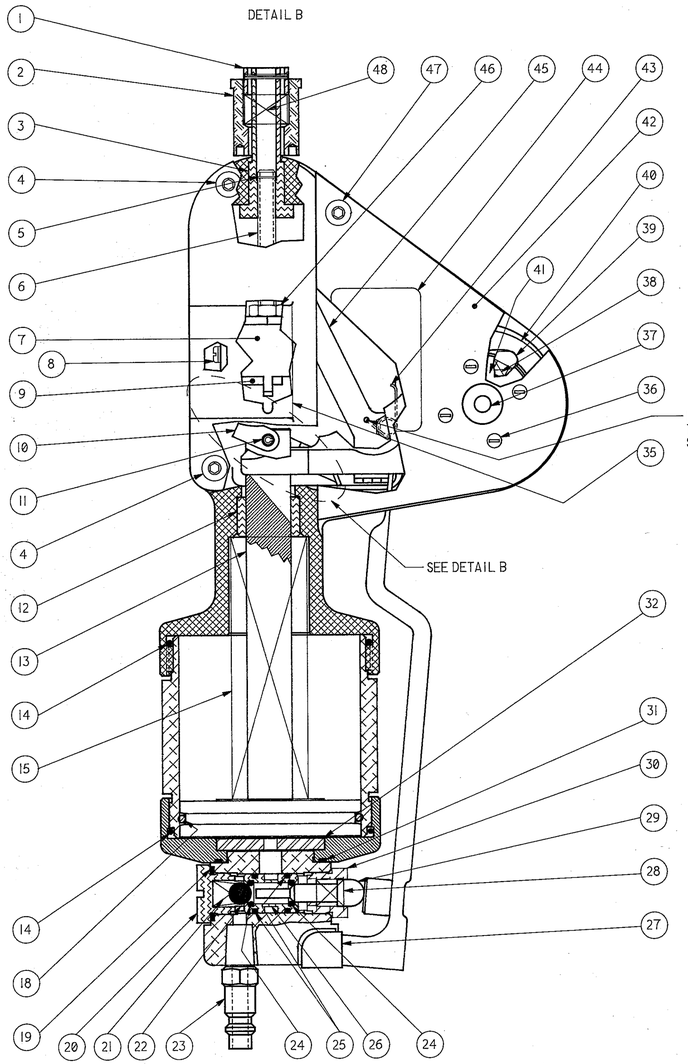

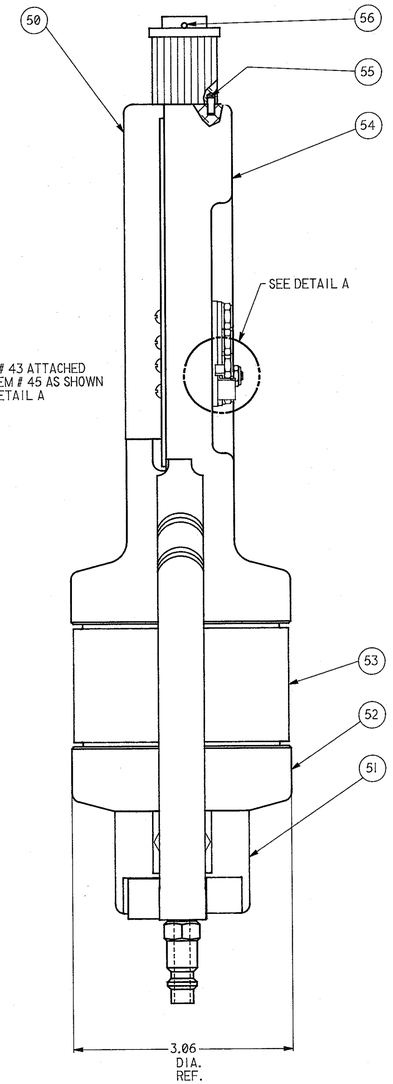

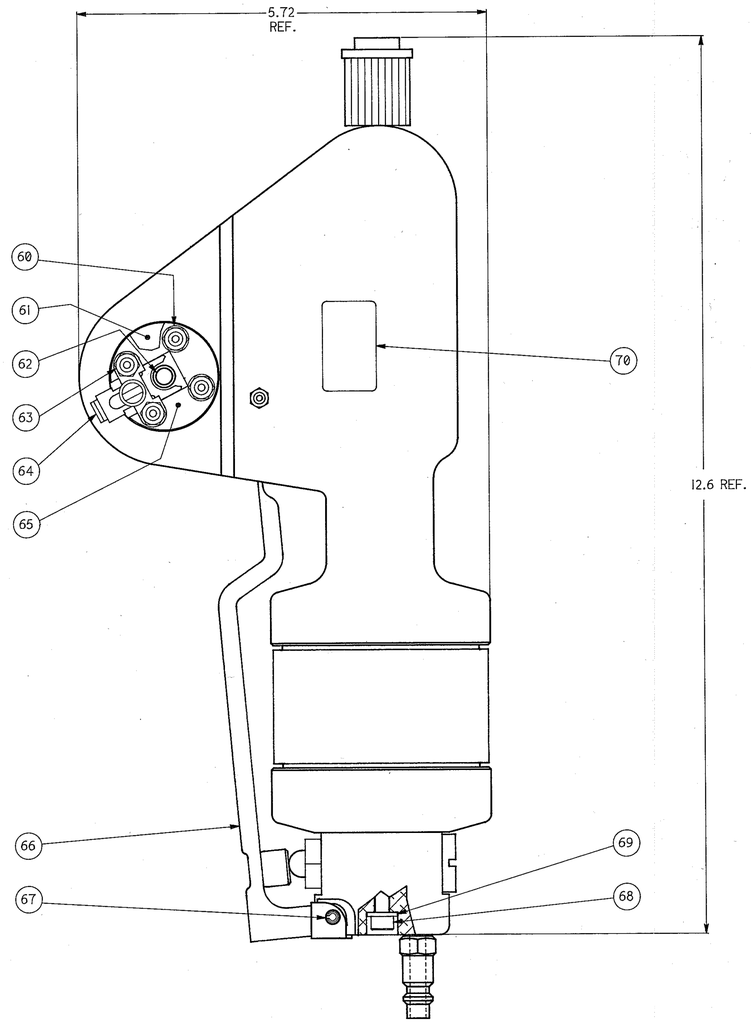

ITEM	DESCRIPTION	L	PART #	QTY
70	DATA PLATE, INFORMATION	46	87032141	1
69	WASHER, SPECIAL	39	85-11221	2
68	SCREW, SOC. HD. CAP 10-32 x 1.5	41	81-10623	2
67	PIN, ROLL 3/16 O.D. x 3/4 L	40	82-10623	1
66B	BUTTON, TRIGGER		70-12141	1
66A	TRIGGER		70-11141	1
66	TRIGGER ASSEMBLY	10	70-44141	1
65	WASHER, SPECIAL "C" SHAPE	74	85-11210	1
64D	WASHER		85-10692	1
64C	SCREW, ROUND HEAD		81-00056	1
64B	SLIDE		45-04210	1
64A	STRAP		45-05210	1
64	SLIDE STRAP ASSEMBLY	79	45-37210	1
63	NUT, LOCK 6-32 UNC-2B	77	80-05210	4
62	ADAPTER, LOCATOR	76	45-22548	1
61	PLATE, ADAPTER	80	70-09003	1
60	WASHER	75	85-11234	2
59	NUT, LOCK 5-40 UNC-3B	43	80-05545	1
58	SPACER	38	70-13141	1
57	SCREW, SHOULDER-SPECIAL	29	81-12141	1
56	PIN, ROLL 1/16 O.D. x 5/8 L	48	82-15250	1
55	PIN, DOWEL .0938 OD. x 1/4 L.	53	83-15250	1
54	HOUSING, MFT	56	70-01141	1
53	CYLINDER	33	73-01141	1
52	ADAPTER, MFT	31	70-08141	1
51	BODY, MFT VALVE	28	70-06141	1
50	COVER, LEFT	57	70-15248	1
49	PIN, ROLL 5/32 DIA. x 5/16 L	13	82-20667	1
48	SPRING, ADJUSTMENT BLOCK	54	84-20474	1
47	SCREW, BUT. HD. CAP. 10-32 x 1/4 L	11	81-13095	1
46	NUT, JAM 1/4-28 UNF 2B	60	80-05141	1
45	RELEASE, MFT TRIGGER LOCK	30	70-07141	1
44	NAME PLATE	45	8602PC03	1
43	SPRING, PAWL	15	84-00002	1
42	COVER, RIGHT	37	70-15141	1
41	SPACER	--	70-13623	1
40	CAM HANDLE, MFT	65	41-10967	1
39	INDENTER, DOUBLE INDENT	49	43-21251	4
38	SPRING, INDENTER	72	84-11067	4
37	INDENTER BODY	50	42-12548	1
36	SCREW, ROUND HEAD SPECIAL	78	81-10967	4
35	DATA PLATE, (WINDOW DIAL)	67	87031245	1
34				
33				
32	PLATE, VALVE CLAMP	32	70-09141	1
31	O-RING	25	80-04871	1
30	PLUG, EXHAUST	20	70-05141	1
29	PLUNGER	17	70-03141	1
28	SPRING	19	84-11221	1
27	MUFFLER	47	73-05141	1
26	SPOOL, INTAKE	18	70-04141	1
25	O-RING	21	80-04141	2
24	O-RING	22	80-04623	2
23	COUPLING, MALE 1/8 NPTF	69	73-12003	1
22	BALL, CHECK	16	70-02141	1
21	SPRING	26	84-10621	1
20	PLUG, INTAKE	27	70-05967	1
19	O-RING	24	80-04967	1
18	O-RING	35	80-04MFT	1
17				
16				
15	SPRING	14	84-12141	1
14	O-RING	23	80-04221	2
13B	PISTON	42	70-14MFT	1
13A	ROD, PISTON	64	70-20MFT	1
13	PISTON ASSEMBLY	--	70-20MF6	1
12	BUSHING	36	70-10141	1
11	PIN, ROLL 5/32 O.D x 7/8 L	44	82-12141	1
10	RELEASE, MFT TRIGGER LOCK	66	70-07002	1
9	PLATE, STOP	62	70-09248	1
8	SCREW, PAN HEAD, 4-40 x 1/4 L	63	81-15250	1
7	INDICATOR, ADJUSTMENT	61	70-19141	1
6	STUD, STOP	51	70-05001	1
5	RING, EXTERNAL, 3/16 DIA. SHAFT	73	80-09141	1
4	SCREW, BUT. HD. CAP. 10-32 x 7/8	12	81-12871	2
3	THIMBLE BARREL	52	70-17141	1
2	KNOB	58	70-47141	1
1	COLLAR,ADJUSTMENT KNOB	55	70-18141	1

BILL OF MATERIALS

REV.	DESCRIPTION	BY	DATE	APR.

THESE DRAWINGS, SPECIFICATIONS OR OTHER DATA ARE AND REMAIN THE PROPERTY OF ASTRO TOOL CORP. AND MAY NOT BE COPIED OR REPRODUCED, DIRECTLY OR INDIRECTLY, OR OTHERWISE USED AND/OR DEVELOPED BY ANYONE AT ANY TIME WITHOUT THE WRITTEN PERMISSION OF ASTRO TOOL CORP. EACH AND EVERY TIME.

SCALE: 1-1
DWN BY: GM
DATE: 3-22-95
APPROVED:

UNLESS OTHERWISE SPECIFIED:
DECIMALS:
.XXX ±.005
.XX ±.010
.X ±.030
ANGLES: ±1°

ASTRO TOOL CORP.
21616 S.W. TUALATIN VALLEY HWY., BEAVERTON OR 97006
CAGE 58164

DESCRIPTION: EXTERNAL ADJUSTABLE CRIMP TOOL, MFT, PNEUMATIC

PART NO. D APC103

NOTES:
1. THIS IS A CAD DRAWING DO NOT CHANGE MANUALLY
2. ASSEMBLE AS SHOWN.

FILE COPY
MAR 30 1995