# Vibration Sensor with Linear Output or Manual Setting

# D7F

CSM_D7F_DS_E_2_1

## Detects Changes in Machine Vibration

- ON/OFF output can be set and checked quickly and easily from the vibration level meter.
- Vibration waveforms can be checked using the AC monitor output.
- The IP67 rating enables use in harsh environments.
- Selectable acceleration and speed available. (Linear Output Models)
- Five operating modes ensure highly accurate error detection. (Manual Setting Models)


Refer to *Safety Precautions* on page 5.

## Ordering Information

### Sensors

| Appearance | Type | Cable length | Model |
|---|---|---|---|
| 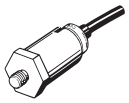 | Manual setting | 5 m | **D7F-S01-05** |
| | | 10 m | **D7F-S01-10** |
| | Linear output | 5 m | **D7F-S03-05** |

### Controllers

| Appearance | Type | Model |
|---|---|---|
| 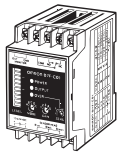 | Manual setting | **D7F-C01** |
| | Linear output | **D7F-C03** |

# Ratings and Specifications

## Sensors

| Type / Item | Manual Setting Models | Linear Output Model |
|---|---|---|
| | D7F-S01-05/D7F-S01-10 | D7F-S03-05 |
| **Sensitivity** * | 5.1 mV/(m/s$^2$) (typical) | 5.1 mV/(m/s$^2$) ±20% (at 100 Hz) |
| **Detection frequency** | 20 Hz to 2 kHz (±3 dB) | 10 Hz to 2 kHz (±3 dB) |
| **Resonance frequency** | Approx. 5 kHz | (Approx. 20 kHz) |
| **Max. acceleration** | 784 m/s$^2$ | 98 m/s$^2$ |
| **Vibration resistance (destruction)** | 10 Hz to 2 kHz, 2-mm single amplitude or 392 m/s$^2$ | 10 to 150 Hz, 0.35-mm single amplitude or 50 m/s$^2$ |
| **Shock resistance (destruction)** | 294 m/s$^2$ 3 times each in X, Y, and Z directions | 150 m/s$^2$ |
| **Connectable vibration sensor Controller** | D7F-C01 | D7F-C03 |
| **Degree of protection** | IP67 (IEC 60529) | |
| **Insulation resistance** | 20 MΩ min. at 100 VDC between the case and all terminals | 100 MΩ min. at 100 VDC between the case and all terminals |
| **Dielectric strength** | 1,000 VAC between the case and all terminals at 50/60 Hz for 1 min | |
| **Ambient operating temperature range** | –25 to 70°C (with no icing or condensation) | |
| **Ambient operating humidity range** | 25% to 95% (with no icing or condensation) | |
| **Storage temperature** | –40 to 80°C (with no icing or condensation) | |
| **Weight** | Approx. 40 g (excluding the cable) | |

*Sensor characteristic

## Controllers

| Type / Item | Manual Setting Model D7F-C01 | Linear Output Model D7F-C03 |
|---|---|---|
| **Power supply voltage range** | 12 to 24 VDC±10% (10.8 to 26.4 VDC) | |
| **Current consumption** | 200 mA max. | 100 mA max. |
| **Ambient operating temperature range** | –20 to 60°C (with no icing or condensation) | –10 to 55°C (with no icing or condensation) |
| **Ambient operating humidity range** | 25% to 95% (with no icing or condensation) | 25% to 85% (with no icing or condensation) |
| **Storage temperature** | –35 to 70°C (with no icing or condensation) | –25 to 65°C (with no icing or condensation) |
| **Vibration resistance (destruction)** | 10 to 150 Hz, 0.75-mm single amplitude, maximum acceleration of 98 m/s² | 10 to 150 Hz, 0.35-mm single amplitude or 50 m/s² |
| **Shock resistance (destruction)** | 294 m/s² | 150 m/s² |
| **Connectable Vibration Sensor** | D7F-S01-□□ | D7F-S03-05 |

| Output | | | | | |
|---|---|---|---|---|---|
| | **Relay output** | SPDT (30 VDC, 3 A or 250 VAC, 3 A resistive load)<br>ON delay: 0.1 s min. in Continuous Vibration Detection Mode<br>5 ms in Intermittent Vibration Detection Mode<br>OFF delay: 1s | **Analog DC** | **Output range** | 4 to 20 mA |
| | | | | **Allowable load resistance** | 300 Ω max. |
| | | | **Transistor** | **Output configuration** | NPN open collector |
| | | | | **Residual voltage** | 1.5 V max. |
| | | | | **Leakage current** | 0.1 mA max. |
| | | | | **Max. load voltage** | 26.4 VDC |
| | | | | **Max. sink current** | 100 mA max. |
| | | | | **Min. output time** | 50 ms min. |
| | **AC monitor** *1 *2 | ±4 VAC (output impedance: 10 kΩ)<br>The output voltages for each range are shown below.<br>×1 range, 5.1 mV (m/s²) (typical)<br>×3 ranges, 15.3 mV (m/s²) (typical)<br>×10 ranges, 51 mV (m/s²) (typical)<br>×30 ranges, 153 mV (m/s²) (typical)<br>×100 ranges, 510 mV (m/s²) (typical) | **AC monitor** *1 *2 | **ACC (reference values)** | ×1 range, 5.1 mV/(m/s²) (typical)<br>×5 ranges, 25.5 mV/(m/s²) (typical)<br>×10 ranges, 51 mV/(m/s²) (typical) |
| | | | | **VEL (reference values)** | ×1 range, 25.4 mV/(mm/s) (typical)<br>×5 ranges, 127 mV/(mm/s) (typical)<br>×10 ranges, 254 mV/(mm/s) (typical) |
| | | | | **Impedance** | 10 kΩ |

| | | |
|---|---|---|
| **Vibration level indicator** | 10-level meter | |
| **Additional functions** | Relay output for a sensor cable disconnection and a flashing level meter | ALM indication for sensor cable disconnections |
| **Weight** | Approx. 120 g | |

*1. The AC monitor output is used to check simple waveforms.
Do not use it for precision measurements or waveform analysis.
The following diagram shows the monitor output voltage.

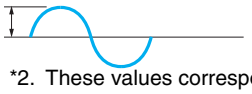

*2. These values correspond to an acceleration of 1 m/s².

| | | ACC (acceleration) | VEL (velocity) |
|---|---|---|---|
| **Range (rms)** | **×1** | 0 to 98 m/s² | 0 to 20 mm/s |
| | **×5** | 0 to 19.6 m/s² | 0 to 4 mm/s |
| | **×10** | 0 to 9.8 m/s² | 0 to 2 mm/s |
| **Frequency range** | | 20 to 2,000 Hz | 10 to 1,000 Hz |
| **Linearity** | | ±5% FS (at 100 Hz)*3 | |
| **Gain error** | | ±5% FS (at 100 Hz)*3 | |
| **Zero point offset** | | 4±0.2 mA (at 20°C)*3 | |

*3. Controller characteristic

# Nomenclature

## Manual Setting Model

D7F-C01 Vibration Sensor Controller
Vibration Sensor Controllers process signals from Vibration Sensors, detect errors, and produce an external output.

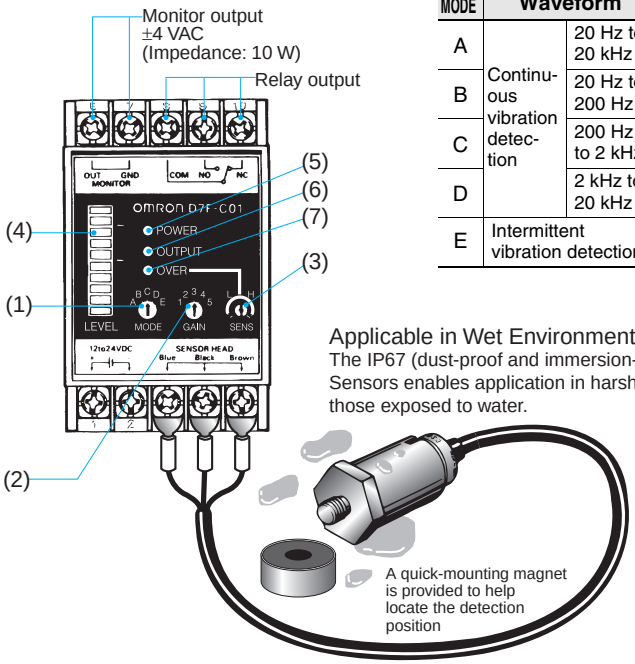


### Applicable in Wet Environments

The IP67 (dust-proof and immersion-proof) rating for Vibration Sensors enables application in harsh environments, including those exposed to water.

• D7F-S01-□□
Vibration Sensor

Vibration Sensors use piezoelectric ceramic devices to convert vibration to electric signals.

### Operations

**(1) MODE Selector**

Selects the waveform processing mode.

| MODE | Waveform | | Application example |
|---|---|---|---|
| A | Continuous vibration detection | 20 Hz to 20 kHz | General purpose, monitoring, etc. |
| B | | 20 Hz to 200 Hz | Imbalance, deviation, etc. |
| C | | 200 Hz to 2 kHz | High-speed rotating object error, etc. |
| D | | 2 kHz to 20 kHz | Bearing damage, etc. |
| E | Intermittent vibration detection | | Contact, shock, etc. |

**(2) GAIN Selector (1 to 100 x)**

The GAIN Selector is used to change the signal strength.
Example: Increasing signal strength

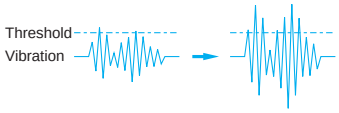


**(3) Sensitivity Adjuster**

The sensitivity adjuster is used to change the threshold setting.

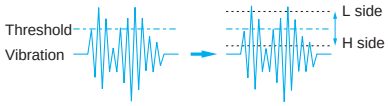


### Indicators

**(4) LEVEL METER (10 levels)**

The Level Meter indicator clearly shows the vibration level.

**(5) POWER**

The POWER indicator is lit when the power is ON.

**(6) OUTPUT**

The OUTPUT indicator is lit when the output relay is operating.

**(7) OVER**

The OVER indicator is lit when vibration is detected.

## Sensor Frequency Characteristics

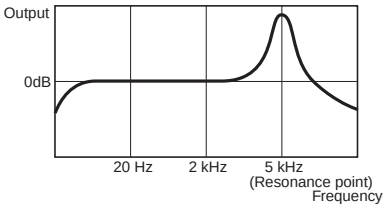


## Terminology

The following diagram shows ON and OFF delay times.

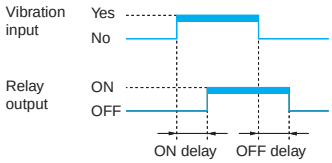


## Linear Output Model

### D7F-C03

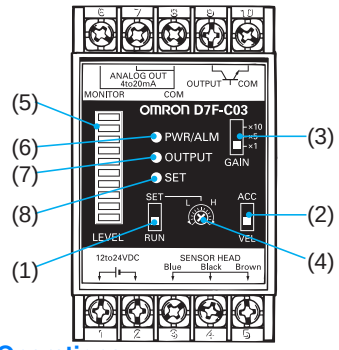


### Operations

**(1) RUN/SET Selector**

The RUN/SET Selector sets the Level Meter indication to RUN or SET.

**(2) ACC/VEL Selector**

The ACC/VEL Selector sets the operating mode to acceleration or velocity.

**(3) GAIN Selector**

The GAIN Selector changes the signal strength.

**(4) Threshold Adjuster**

The Threshold Adjuster sets the threshold value.

### Indicators

**(5) Level (10 levels)**

RUN: Indicates vibration magnitude.
SET: Indicates threshold settings.

| Level Meter levels | Vibration level and threshold settings |
|---|---|
| 10 | 95% or higher FS |
| 9 | 85% to 95% FS |
| 8 | 75% to 85% FS |
| 7 | 65% to 75% FS |
| 6 | 55% to 65% FS |
| 5 | 45% to 55% FS |
| 4 | 35% to 45% FS |
| 3 | 25% to 35% FS |
| 2 | 15% to 25% FS |
| 1 | 5% to 15% FS |

**Note:** Use the Level Meter indicator strictly as a guideline.

**(6) PWR/ALM Indicator**

Power ON: Green light
Sensor error: Red light

**(7) OUTPUT Indicator**

The output transformer operates and the OUTPUT indicator lights at vibration levels exceeding the threshold setting.
The output and indications are the same whether RUN or SET is selected.

**(8) SET Indicator**

The SET Indicator is lit when SET is selected from the RUN/SET selector.

# Safety Precautions

## Precautions for Safe Use

Do not perform wiring work or touch any terminals with power supplied. Doing so may result in electric shock.

## Precautions for Correct Use

Do not use this product in atmospheres or environments that exceed product ratings.

### Sensor Installation

- Wipe the mounting surface to remove all dirt and use a No. 17 wrench to secure the D7F in place.
  Optimum tightening torque: 4.4 to 5.4 N·m
  Mounting hole dimensions: M6 holes, Depth: 7 mm min.
- The D7F may not operate correctly if it is not secured with the proper torque or the mounting surface is not cleaned properly prior to installation.
- The quick-mounting magnet is provided to help locate the proper detection position. Make sure the D7F is secured with screws for long-term applications.
- The quick-mounting magnet will not hold the D7F if the magnet is installed vertically or backwards.

**Quick-mounting Magnet Dimensions**

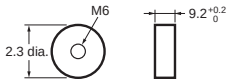


### Sensor Mounting Direction

Mount the D7F as indicated by the circle in the diagram below.

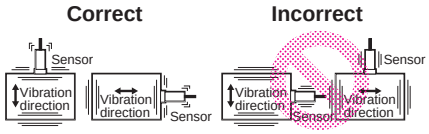


### Handling the Sensor

- The Sensor Cable can be cut to any length, but it cannot be extended.
- Do not disassemble the D7F. Otherwise, it may not operate properly.
- Make sure all wiring is correct and be careful not to short wires while wiring.
- Do not install the D7F in locations subject to oil. Otherwise, the rubber seal will deteriorate, allowing liquids such as oil or water to enter the D7F, which may cause it to fail.
- The D7F should be connected only to a specified Controller, such as the D7F-C01 or D7F-C03.

### Handling the Controller

- The Controller should be connected only to a specified Sensor, such as the D7F-S01-□□ or D7F-S03-□□.
- Do not attempt to disassemble the Controller. Otherwise, it may not operate properly.
- Do not install the Controller in a dusty location or one subject to water or oil.
- Do not mount the Controller directly to any source of vibration.

### Removing the D7F from a DIN Track

Remove the D7F from a DIN Track as shown in the diagram on the right.

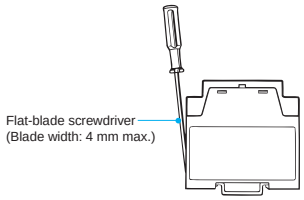


### When Using the Product in an Environment in Which Noise Is Present

Use the Electromagnetic Shielding Sleeve DS-10 made by Sumitomo 3M.
Using any other shielded wire may cause the D7F-C01 to vibrate.

# Dimensions

(Unit: mm)

## Sensors

### D7F-S01-05
### D7F-S01-10

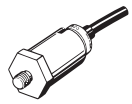

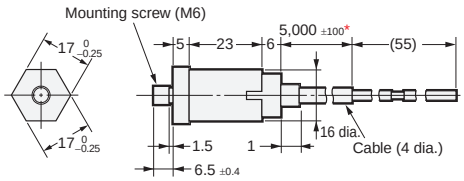


*10,000 ±100 for a cable 10 m long.

### D7F-S03-05

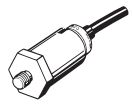

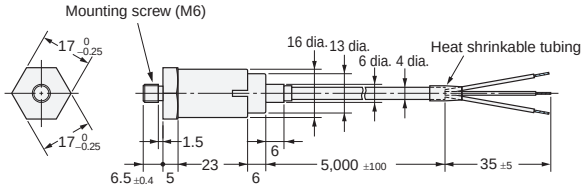


## Controllers

### D7F-C01

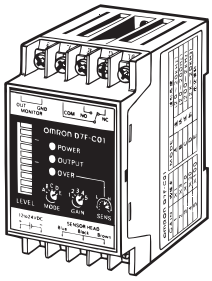

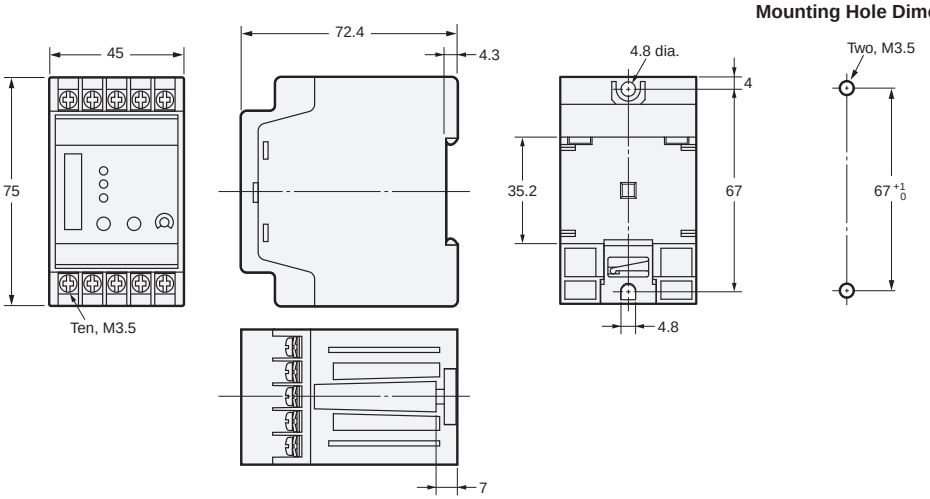


### D7F-C03

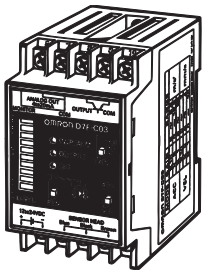

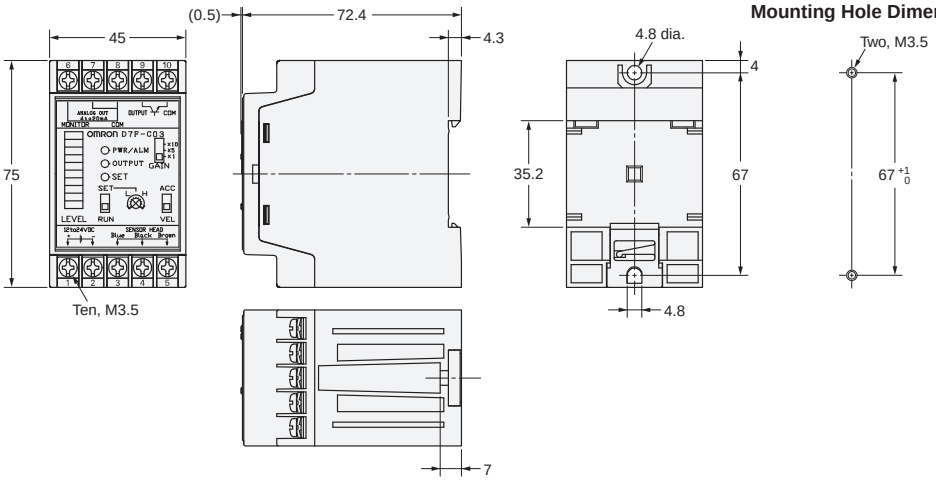

## Terms and Conditions Agreement

Read and understand this catalog.
Please read and understand this catalog before purchasing the products. Please consult your OMRON representative if you have any questions or comments.

Warranties.
(a) Exclusive Warranty. Omron's exclusive warranty is that the Products will be free from defects in materials and workmanship for a period of twelve months from the date of sale by Omron (or such other period expressed in writing by Omron). Omron disclaims all other warranties, express or implied.
(b) Limitations. OMRON MAKES NO WARRANTY OR REPRESENTATION, EXPRESS OR IMPLIED, ABOUT NON-INFRINGEMENT, MERCHANTABILITY OR FITNESS FOR A PARTICULAR PURPOSE OF THE PRODUCTS. BUYER ACKNOWLEDGES THAT IT ALONE HAS DETERMINED THAT THE
PRODUCTS WILL SUITABLY MEET THE REQUIREMENTS OF THEIR INTENDED USE.
Omron further disclaims all warranties and responsibility of any type for claims or expenses based on infringement by the Products or otherwise of any intellectual property right. (c) Buyer Remedy. Omron's sole obligation hereunder shall be, at Omron's election, to (i) replace (in the form originally shipped with Buyer responsible for labor charges for removal or replacement thereof) the non-complying Product, (ii) repair the non-complying Product, or (iii) repay or credit Buyer an amount equal to the purchase price of the non-complying Product; provided that in no event shall Omron be responsible for warranty, repair, indemnity or any other claims or expenses regarding the Products unless Omron's analysis confirms that the Products were properly handled, stored, installed and maintained and not subject to contamination, abuse, misuse or inappropriate modification. Return of any Products by Buyer must be approved in writing by Omron before shipment. Omron Companies shall not be liable for the suitability or unsuitability or the results from the use of Products in combination with any electrical or electronic components, circuits, system assemblies or any other materials or substances or environments. Any advice, recommendations or information given orally or in writing, are not to be construed as an amendment or addition to the above warranty.
See http://www.omron.com/global/ or contact your Omron representative for published information.

Limitation on Liability; Etc.
OMRON COMPANIES SHALL NOT BE LIABLE FOR SPECIAL, INDIRECT, INCIDENTAL, OR CONSEQUENTIAL DAMAGES, LOSS OF PROFITS OR PRODUCTION OR COMMERCIAL LOSS IN ANY WAY CONNECTED WITH THE PRODUCTS, WHETHER SUCH CLAIM IS BASED IN CONTRACT, WARRANTY, NEGLIGENCE OR STRICT LIABILITY.
Further, in no event shall liability of Omron Companies exceed the individual price of the Product on which liability is asserted.

Suitability of Use.
Omron Companies shall not be responsible for conformity with any standards, codes or regulations which apply to the combination of the Product in the Buyer's application or use of the Product. At Buyer's request, Omron will provide applicable third party certification documents identifying ratings and limitations of use which apply to the Product. This information by itself is not sufficient for a complete determination of the suitability of the Product in combination with the end product, machine, system, or other application or use. Buyer shall be solely responsible for determining appropriateness of the particular Product with respect to Buyer's application, product or system. Buyer shall take application responsibility in all cases.
NEVER USE THE PRODUCT FOR AN APPLICATION INVOLVING SERIOUS RISK TO LIFE OR PROPERTY OR IN LARGE QUANTITIES WITHOUT ENSURING THAT THE SYSTEM AS A WHOLE HAS BEEN DESIGNED TO ADDRESS THE RISKS, AND THAT THE OMRON PRODUCT(S) IS PROPERLY RATED AND INSTALLED FOR THE INTENDED USE WITHIN THE OVERALL EQUIPMENT OR SYSTEM.

Programmable Products.
Omron Companies shall not be responsible for the user's programming of a programmable Product, or any consequence thereof.

Performance Data.
Data presented in Omron Company websites, catalogs and other materials is provided as a guide for the user in determining suitability and does not constitute a warranty. It may represent the result of Omron's test conditions, and the user must correlate it to actual application requirements. Actual performance is subject to the Omron's Warranty and Limitations of Liability.

Change in Specifications.
Product specifications and accessories may be changed at any time based on improvements and other reasons. It is our practice to change part numbers when published ratings or features are changed, or when significant construction changes are made. However, some specifications of the Product may be changed without any notice. When in doubt, special part numbers may be assigned to fix or establish key specifications for your application. Please consult with your Omron's representative at any time to confirm actual specifications of purchased Product.

Errors and Omissions.
Information presented by Omron Companies has been checked and is believed to be accurate; however, no responsibility is assumed for clerical, typographical or proofreading errors or omissions.

2017.5

**In the interest of product improvement, specifications are subject to change without notice.**

**OMRON Corporation**
**Industrial Automation Company**

**http://www.ia.omron.com/**